SAPIENZA
UNIVERSITÀ DI ROMA

Faculty of Information Engineering, Informatics and Statistics
Department of Computer Science

Advanced Architectures

Author:
Simone Lidonnici

10 april 2026

Contents

E Exercises **1**
E.1 Exercises on performance . . . 1
E.1.1 Amdahl's Law . . . 1
E.1.2 Gustafson Law . . . 2
E.1.3 Processor Performance . . . 2
E.1.4 Circuit area and time . . . 3
E.2 Exercises on number representation . . . 5
E.2.1 Multiplication of two complement number . . . 5
E.2.2 Sum with redundant number system . . . 5
E.2.3 Simmetric number representation . . . 6
E.2.4 Conversion between decimal and signed digit . . . 7
E.2.5 Modified binary signed digit . . . 7
E.2.6 Redundant binary . . . 8
E.2.7 Residue number system . . . 9
E.2.8 Multiple radix system . . . 10

E

Exercises

E.1 Exercises on performance

E.1.1 Amdahl's Law

Amdahl's Law

The Amdahl's law gives a bound on the speedup of a program that is enhanced (parallelized) based on the fraction of program that we can enhance α. We can calculate the time with the enhancement:

$$T_e = (1-\alpha)T + \alpha\frac{T}{S_e}$$

In which T_e is the time with the enhancement, S_e the speedup of the enhanced part and T the base program time. For parallelization with p process we can assume $S_e = p$. We can calculate the speedup as:

$$S = \frac{1}{(1-\alpha) + \frac{\alpha}{S_e}}$$

Another important metric is the efficiency with p processes:

$$E = \frac{S}{p} = \frac{1-\alpha}{p} + \alpha$$

Example:
We have a processor that does:

- 20% of the time FPSQR
- 50% of time FP

We have 2 option of enhancement:

1. Speedup FPSQR by 10 times
2. Speedup FP by 1.6 times

We calculate the speedup of the two options:

$$S_1 = \frac{1}{(1-0.2) + \frac{0.2}{10}} = \frac{1}{0.82} \simeq 1.22$$

$$S_2 = \frac{1}{(1-0.5) + \frac{0.5}{1.6} = \frac{1}{0.8125} \simeq 1.23}$$

So, the second one is slightly better.

E.1.2 Gustafson Law

Gustafson Law

The Gustafson Law uses the opposite approach in respect to the Amdahl law, so using enhanced time (parallelized) T_e with p processes, we can estimate the sequantial time based on the fraction of program that we can enhance α:

$$T = (1-\alpha)T_e + \alpha p T_e$$

The speedup can be calculated:

$$S = (1-\alpha) + \alpha p$$

Example:
We have a program that can be parallelized for 50% and we have two processors, one with 2 core and the other with 4. The speedup that the two processors can reach is:

$$S_1 = (1-0.5) + 2 \cdot 0.5 = 1.5 \implies E_1 = \frac{1.5}{2} = 0.75$$

$$S_2 = (1-0.5) + 4 \cdot 0.5 = 2.5 \implies E_2 = \frac{2.5}{4} = 0.625$$

So, with 4 cores we have more speedup but less efficiency.

E.1.3 Processor Performance

Processors uses clock cycles (CC) to run at costant rate. For a program we can calculate the CPU time for a program as:

$$CPU \text{ time} = CC \text{ program}/C \text{ rate} = CC \text{ program} \cdot C \text{ time}$$

We can count the number of instruction executed (IC) and knowing the CC per program we can calculate the CC per instruction (CPI):

$$CPI = C \text{ program}/IC$$

With the previous formulas we can redefine the CPU time as:

$$CPU \text{ time} = IC \cdot CP \cdot C \text{ time}$$

It is useful to also calculate the total clock cycle of a program considering the different types of instructions:

$$CC \text{ program} = \sum_{\forall i} IC_i \cdot CPI_i$$

In which i is a type of instruction.

If on a processor we decrease the CPI of a specific instruction, we can calculate the new CPI by subtracting the weighted difference:

$$CPI_e = CPI - \%instr(CPI_{old-instr} - CPI_{new-instr})$$

In which $\%instr$ is the fraction of the instruction enhanced, $CPI_{old-instr}$ is the CPI of that specific instruction before the enhancement and $CPI_{new-instr}$ after the enhancement.
Example:
We have a processor that does:

- 2% of the time FPSQR with 20 CPI
- 25% of time FP with 4 CPI
- Other instruction with 1.33 CPI

We have 2 option of enhancement:

1. Decrease the CPI of FPSQR to 2
2. Decrease the CPI of FP to 2.5

The starting CPI average is:

$$CPI_{old} = (4 \cdot 0.25) + (1.33 \cdot 0.75) = 2$$

The enchanced CPI and speedup are:

$$CPI_1 = 2 - 0.02(20 - 2) \simeq 1.64 \implies S_1 = \frac{2}{1.64} \simeq 1.22$$

$$CPI_2 = (2.5 \cdot 0.25) + (1.33 \cdot 0.75) \simeq 1.625 \implies S_2 = \frac{2}{1.625} \simeq 1.23$$

So, the second one is slightly better.

E.1.4 Circuit area and time

To approximate the time and area of a circuit we relwte them to the area and speed of the simplest gates. Each simple gate with 2 input count as 1 gate for area and 1 gate delay unit for time. The only exception is the xor gate which counts as 2 because is implemented with 2 basic gates.
To take in account the number of inputs of gates we count a m input gate as:

- Time: $\lceil \log m \rceil$ gates
- Area: $m - 1$ gates

From now on, we will define the gate unit for area as A and the gate delay unit for time as T.
Some simple adders have this costs:

1. Half adder:

- Time: 2T
- Area: 3A

2. Full adder:

   - Time: 4T
   - Area: 7A

3. Ripple-Carry adder with n bits:

   - Time: $4n$T
   - Area: $7n$T

Example:
We have 3 operands of 4 bits and we want to sum them using the Carry-Save Adder below:

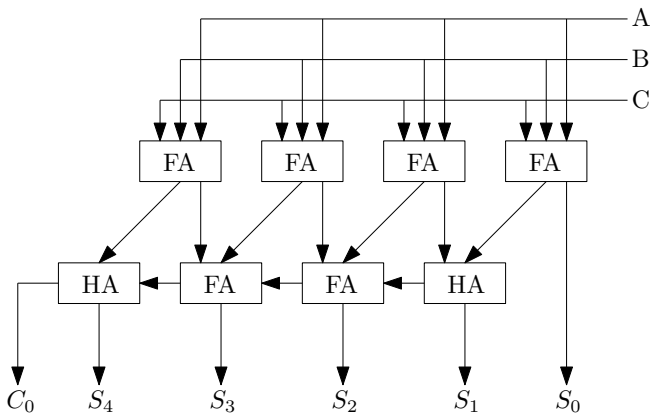

We can calculate the time and area of this adder in respect to the RCA for the same 3 4-bits operands:

1. Carry-Save Adder:

   - Time: FA + HA + 2FA + HA = 4 + 2 + 2·4 + 2 = 16T
   - Area: 6FA + 2HA = 6·7 + 2·3 = 48A

2. Ripple-Carry:

   - Time: 2RCA (4 bits) = 2·4·4 = 32T
   - Area: RCA (4bits) = 7·4 = 28A (we can reuse the same two times)

The speedup for both time and area is:

- Time: $\frac{32}{16} = 2$
- Area: $\frac{28}{48} \simeq 0.6$

E.2 Exercises on number representation

E.2.1 Multiplication of two complement number

To multiply two operands written in two's complement we can use a easier trick in respect to doing the multiplication the normal way. Let A and B be the two operands we want to multiply, for every digit a_i in A:

- If (a_i, a_{i-1}) is (0,0) or (1,1): nothing to add
- If (a_i, a_{i-1}) is (1,0) or the firts digit as 1: sub B
- If (a_i, a_{i-1}) is (0,1): add B

The add and sub are shifted based on the position of the i-th digit in A.
Example:
We want to multiply 10 and -7, so in two's complement:

$$A = 01010 \qquad B = 11001$$

The multiplication is done:

			0	1	0	1	0
x			1	1	0	0	1
-				1	0	1	0
+			1	0	1	0	
+		0	0	0	0		
-	1	0	1	0			

The sub are transformed into sum of the opposite, so the complement plus 1. The number of digits of the result is the sum of digits of the two numbers.

						0	1	0	1	0
x						1	1	0	0	1
+	1	1	1	1	1	1	0	1	1	0
+						1	0	1	0	
+					0	0	0	0		
+	1	1	1	0	1	1	0	0	0	0
$\cancel{1}$	1	1	1	0	1	1	1	0	1	0

E.2.2 Sum with redundant number system

We can have redundant number system where the number of digit allowed for a particular radix is higher than the radix itself.
To sum two number we must:

1. Sum the numbers digit by digit, creating a result that has a digit set doubled than the initial two numbers.

2. Define an intermediate sum and carry that sum up to the initial digit set, generating the carry using the radix.

3. Sum the intermediate sum with the carry.

Example:
We have a number system in radix 10 and digit set $[0, 11]$. The two number we want to sum are:

		11	10	7	11	3	8	digit $\in [0, 11]$
+		7	2	9	10	9	8	digit $\in [0, 11]$
		18	12	16	21	12	16	digit $\in [0, 22]$
		8	2	6	1	2	6	digit $\in [0, 9]$
	1	1	1	2	1	1		digit $\in [0, 2]$
	1	9	3	8	2	3	6	digit $\in [0, 11]$

E.2.3 Simmetric number representation

Usaually redundant number systems with radix r have a digit setin the form $[\overline{a}, a]$ where $\left\lceil \frac{r-1}{2} \right\rceil \leq a \leq r - 1$.
We can calculate the redundantancy of the digit set by dividing the number of numbers that have more than one representation by the total number in the range of digits for a defined number of digits n. For a range of digits $[-\alpha, \beta]$ we can calculate the redundancy index ρ as:

$$\rho = \alpha + \beta + 1 - r$$

This digit sets permit to do the sum using an algorithm:

$$(x_{n-1}, \ldots, x_0) \pm (y_{n-1}, \ldots, y_0) = (s_{n-1}, \ldots, s_0)$$

1. Compute c_i with the rule:

$$c_i = \begin{cases} 1 & (x_i + y_1) \geq a \\ \overline{1} & (x_i + y_i) \leq \overline{a} \\ 0 & \overline{a} < (x_i + y_i) < a \end{cases}$$

2. Compute the interim sum u_i:

$$u_i = x_i + y_i - rc_i$$

3. Compute s_i:

$$s_i = u_i + c_{i-1}$$

Example:
We have a number system with $r = 10$ and $a = 6$.
With $n = 2$ the numbers in the range $\overline{66} \leq x \leq 66$ are 133, but we have $13^2 = 169$ number representation, so the redundantancy is:

$$(169 - 133)/133 = 27\%$$

The redundant index is:

$$\rho = 6 + 6 + 1 - 10 = 3$$

We want to sum two numbers $X = 3645$ and $B = 1456$:

$$\begin{array}{cccccc} & 3 & 6 & 4 & 5 & X \\ + & 1 & 4 & 5 & 6 & Y \\ \hline 0 & 1 & 1 & 1 & & C \\ & 4 & 0 & \overline{1} & 1 & U \\ \hline & 5 & 1 & 0 & 1 & S \end{array}$$

E.2.4 Conversion between decimal and signed digit

Using the digit set as before $[\overline{a}, a]$ with radix $r = 10$, we can easily convert a number from decimal to this representation.

- Decimal to signed digit: Using the same formula as the sum but backwards, calculating the carry and interim sum.
- Signed digit to decimal: Simply subtract the negative digits.

Example:
We have the number 6849 in decimal and the conversion in signed digit with digit set $[\overline{6}, 6]$ is:

$$\begin{array}{cccccc} & 6 & 8 & 4 & 9 & X+Y \\ \hline 1 & 1 & 0 & 1 & & C \\ & \overline{4} & \overline{2} & 4 & \overline{1} & U \\ \hline 1 & \overline{3} & \overline{2} & 5 & \overline{1} & S \end{array}$$

The conversion backwards is simply:

$$\begin{array}{cccccc} & 1 & \overline{3} & \overline{2} & 5 & \overline{1} \\ \hline & 1 & 0 & 0 & 5 & 0 \\ - & 0 & 3 & 2 & 0 & 1 \\ \hline & & 6 & 8 & 4 & 9 \end{array}$$

E.2.5 Modified binary signed digit

In binary we can only have $a = 1$, so the digit set can only be $\{\overline{1}, 0, 1\}$, to perform the sum of two numbers in this representation 3 steps are needed:

1. The two lines are the sum and carry but if the result is 1 its written as $1\overline{1}$ and if the result is $\overline{1}$ is written as $\overline{1}1$. This can be done because of the redundant system.
2. The two lines are simply sum and carry
3. Same as the first

At the end you will have the sum and complemented sum in the last two lines.
Example:

If the two numbers we want to sum are 9, written as $1\bar{1}01\bar{1}$ and -10, written as $\bar{1}1\bar{1}10$, the sum is done:

$$
\begin{array}{cccccc}
 & 1 & \bar{1} & 0 & 1 & \bar{1} & 9 \\
 & \bar{1} & 1 & \bar{1} & 1 & 0 & -10 \\
\hline
 & 0 & 0 & 1 & 0 & 1 & \\
0 & 0 & \bar{1} & 1 & \bar{1} & & \\
\hline
 & 0 & \bar{1} & 0 & \bar{1} & 1 & \\
0 & 0 & 1 & 0 & 0 & & \\
\hline
 & 0 & 0 & 0 & 1 & \bar{1} & 1 \\
0 & 0 & 0 & \bar{1} & 1 & & -1
\end{array}
$$

E.2.6 Redundant binary

Exists another binary redundant system in which each power of 2 is defined by 2 digit that are summed, for example 01 11 is equal to $0 \cdot 2^1 + 1 \cdot 2^1 + 1 \cdot 2^0 + 1 \cdot 2^0 = 4$.
To make the sum the follow table is used, doing 3 iterations:

	00	01	10	11
00	00 00	10 00	00 01	10 01
01	00 01	10 01	00 10	10 10
10	00 01	10 01	00 10	10 10
11	00 10	10 10	00 11	10 11

A trick to remember the table is to write the upper result of the 1st and 3rd column as 00 (the ones with 00 and 10 on top) and the upper result of the 2nd and 4th column as 10 (the ones with 01 and 11 on top). After that the lower result can be computed simply by doing the sum.
The representation of negative number follows the same idea of the two's complement in which the first digit (in this case the first pair) is negative. To perform the complement we reverse each bit and we add 2 (11 as the first digit).
Example:
We want to perform $A - B$ in which $A = 00\ 01\ 00\ 01\ 10$ and $B = 00\ 00\ 01\ 11\ 11$.
We convert B into its complement to perform the sub:

$$
\begin{array}{cccccc}
11 & 11 & 10 & 00 & 00 & + \\
 & & & 01 & 00 & = \\
\hline
11 & 11 & 10 & 01 & 00 &
\end{array}
$$

The sum between $A - B$ is done as follows:

	00	01	00	01	10	+
	11	11	10	00	11	
	10	10	00	10	00	
0	11	00	10	10	1/	
	10	00	00	00	00	
1	00	10	11	00	1/	
	00	00	10	00	00	
0	10	10	10	00	1/	
	00	00	00	00	00	
0	10	11	00	00	10	

This result is correct because the numbers are:

1. $A = 1 \cdot 2^3 + 1 \cdot 2^1 + 1 \cdot 2^0 = 11$
2. $B = 1 \cdot 2^2 + 2 \cdot 2^1 + 2 \cdot 2^0 = 10$
3. $A - B = -1 \cdot 2^4 + 2 \cdot 2^3 + 1 \cdot 2^0 = 1$

E.2.7 Residue number system

A residue number system is representation based on a set of moduli $S = \{m_1, \ldots, m_n\}$ that define a range $[0, M-1]$ where $M = m_1 \cdot \ldots \cdot m_n$. A number X in this number system is written as:

$$X =< x_1, \ldots, x_n >$$

where $x_i = X \mod m_1$.
If the number that compose the module set are relatively prime, every number $X < M$ has a unique representation.
To represent also negative number we change the range of numbers:

1. If M is odd: $\left[-\frac{(M-1)}{2}, \frac{M-1}{2}\right]$
2. If M is even: $\left[-\left(\frac{(M-1)}{2} - 1\right), \frac{M}{2}\right]$

With negative number the value of a number in respect to a specific module m_i is:

$$x_i = \begin{cases} \langle X \rangle_{m_i} & X \geq 0 \\ \langle m_i - \langle |X| \rangle_{m_i} \rangle_{m_i} & X < 0 \end{cases}$$

In this number system the basic operation are done as follows:

- Sum: add each module component of the two number and apply the module at the end.

$$X + Y = Z \quad Z_i = \langle X_i + Y_i \rangle_{m_i}$$

- Subraction: add the first number and the opposite of the second one. The opposite of a number is the additive inverse of each module component:

$$X_i + \overline{X}_i = m_i$$

- Multiplication: multiply each module component of the two number and apply the module at the end.

$$X + Y = Z \quad Z_i = \langle X_i \cdot Y_i \rangle_{m_i}$$

- Division: multiply the first number and the multiplicative inverse of the second one. The multiplicative inverse is the number that multiplied by the original number gives 1:

$$\langle X_i \cdot X_i^{-1} \rangle_{m_i} = 1$$

Example:
If we have a module set $S = \{2, 3, 5\}$ with value of $M = 2 \cdot 3 \cdot 5 = 30$, the range represented will be $[-14, 15]$.
Two number 11 and 5 converted in this number system will be written as:

$$11 =< 1, 2, 1 > \quad 5 =< 1, 2, 0 >$$

The sum and multiplication of the two number is simply:

1. Sum: $< 2, 4, 1 >=< 0, 1, 1 >= 16$
2. Multiplication: $< 1, 2, 0 >= 5$

For the subtraction, we need to calculate first the inverse of 5:

$$-5 =< 1, 1, 0 >$$

And then the subtraction is simply:

$$11 - 5 =< 0, 0, 1 >= 6$$

E.2.8 Multiple radix system

Given a module set $S = \{m_1, \ldots, m_n\}$ a number in the multiple radix system is represented as:

$$X = x_n \cdot (m_{n-1} \cdot \ldots \cdot m_1) + \ldots + x_3 \cdot (m_2 \cdot m_1) + x_2 \cdot m_1 + x_1$$

To convert a number written in RNS $X =< x_n, \ldots, x_1 >$ to MRS we need to follow a series of steps (we call x the RNS representation and z the MRS representation):

1. z_1 is equal to x_1
2. For each other digit z_i:
   - 2.1 Subtract $X - z_{i-1}$
   - 2.2 Divide X by m_{i-1}
   - 2.3 The i-th digit of the result will be z_i

Example:
Given the module set $S = \{13, 11, 8, 7\}$ and the number $X = 68$ we want to write the RNS representation and convert it in the MRS.
The RNS representation is:

$$X =< 3, 2, 4, 5 >$$

The convertion follows this steps:

1. $z_1 = x_1 = 5$
2. z_2:
   2.1 $X - z_1 =< 11, 8, 7, - >$
   2.2 $X/7 \implies 7^{-1} =< 2, 8, 7, - > \implies X/7 =< 9, 9, 1, - >$
   2.3 $z_2 = 1$
3. z_3:
   3.1 $X - z_2 =< 8, 8, -, - >$
   3.2 $X/8 \implies 8^{-1} =< 5, 7, -, - > \implies X/8 =< 1, 1, -, - >$
   3.3 $z_3 = 1$
4. z_4:
   4.1 $X - z_3 =< 0, -, -, - >$
   4.2 $X/11 \implies 11^{-1} =< 6, -, -, - > \implies X/11 =< 0, -, -, - >$
   4.3 $z_4 = 0$

So, X written as MRS is:

$$Z = (0, 1, 1, 5)$$

We can control if its right by doing the basic calculation:

$$Z = 0 \cdot (11 \cdot 8 \cdot 7) + 1 \cdot \underbrace{(8 \cdot 7)}_{56} + 1 \cdot 7 + 5 = 68$$